# Anschlüsse LED Beleuchtungsmodul „Traffic“

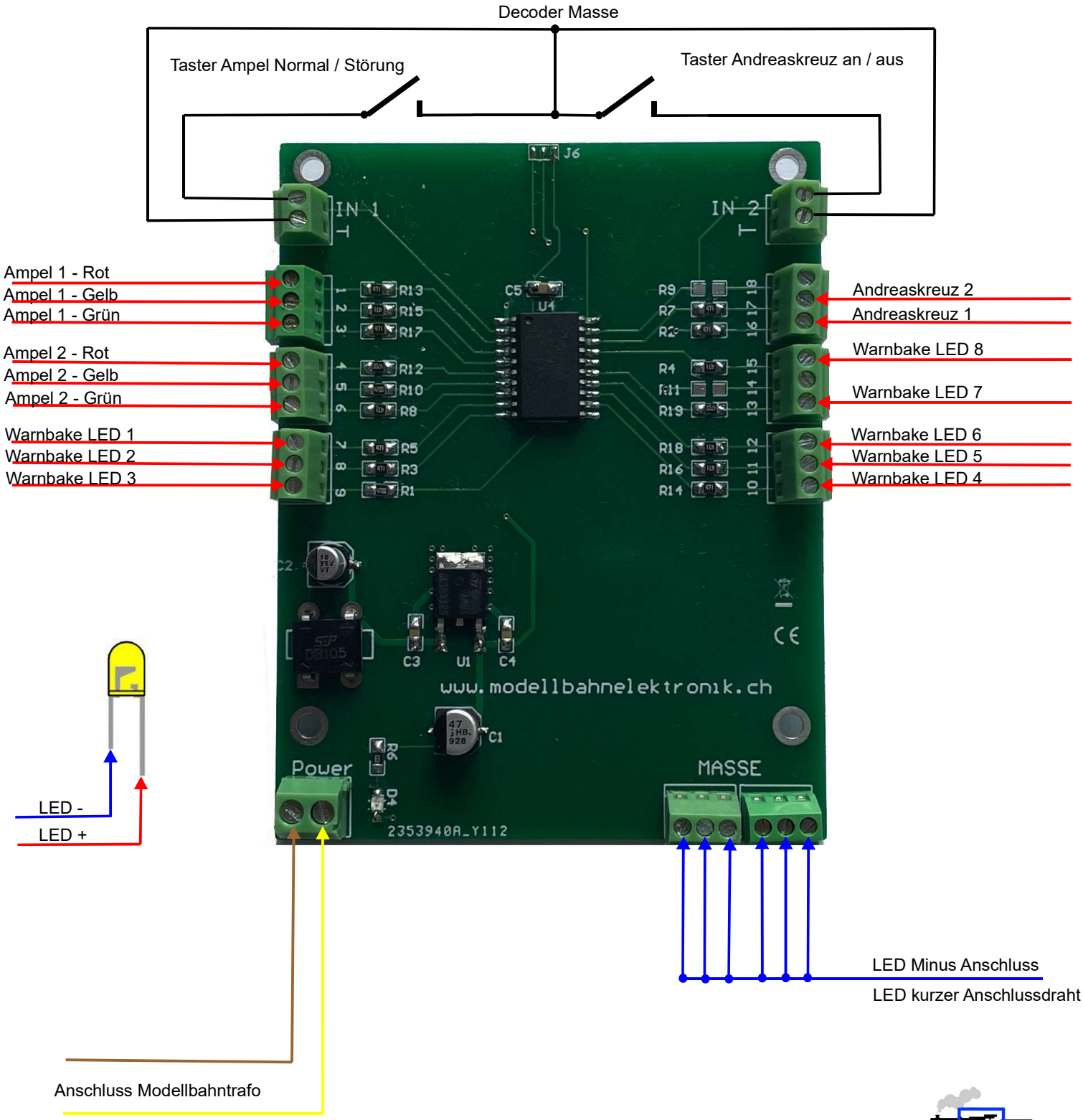


**Modellbahnelektronik made in Switzerland**